Installation Instructions

20100326001_AEN Revision 08

ELECTRONICS RESEARCH INC.
ESTABLISHED 1943

100A Series Low Power FM Antenna

Type's: 100A-1M, 100A-2F, 100A-2F-HW, 100A-4F, 100A-4F-HW

Notice

The installation, maintenance, or removal of antenna systems requires qualified, experienced personnel. ERI installation instructions are written for such personnel. Antenna systems should be inspected once a year by qualified personnel to verify proper installation, maintenance, and condition of equipment. ERI disclaims any liability or responsibility for the results of improper installation practices.

READ THE INSTRUCTIONS THOROUGHLY BEFORE ASSEMBLY

Preparation

Before beginning the assembly and installation of the 100A Series antenna system, make sure all parts are present.

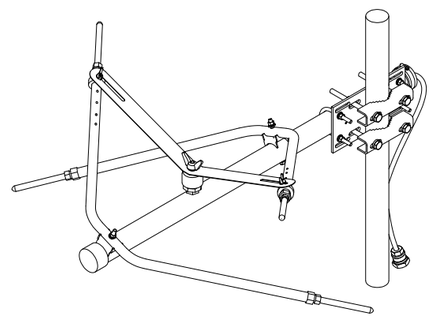

Tools Required (not included)

- 5/32 Inch Allen wrench
- 9/16 Inch Open-end wrench
- Adjustable wrench (15/16 Inch Capacity)
- Ruler or Tape Measure accurate to 1/32 inch (.03 in)

NOTE: A torque wrench adaptable to tools mentioned above will be helpful in the installation process.

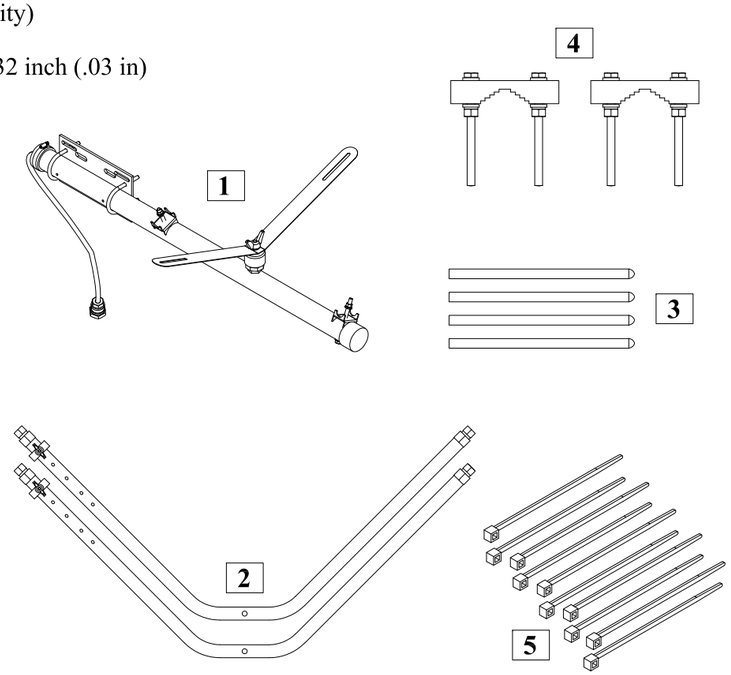

Parts*

1. Element Boom Assembly (qty 1)
2. Element Arm Assembly (qty 2)
3. Arm Extender Kit (qty 4)
4. Universal Mounting Clamps (qty 2)
5. Cable Ties (qty 10)

* The parts listed are for the AE-100A-1M.

Please Read the Following before Installing Your Antenna

If your antenna is/was ordered as a "special" or "directional" antenna it may come with additional customized parts and factory tuning. If so, a set of customized drawings are provided for the installation and supercede these and all other instructions. No additional tuning will be required unless you are willing to attempt an on-site, as-mounted trial and error tuning process **(see below, Improving the Match of Your Standard 100 Series Antenna)**

Standard 100 Series Information

The 100 Series antenna provides a knock-down kit of components that can be quickly assembled into a basic FM circular polarized broadcast antenna. The element feed consists of a ½" pigtail cable terminated in a male 7-16 DIN connector. This cable is rated to handle 1 kW. The rating becomes 2 kW when the elements are assembled into an array of two or more bays using power dividers. The antenna's optimum operating frequency is established by setting the dipole arm extenders, feed strap position and spacing of elements. The information for setting these variables is charted in the appropriate settings table. When properly adjusted the antenna should provide an acceptably low VSWR; however, please note:

During development the "standard" 100 Series antenna, in all its currently offered configurations, was carefully assembled and adjusted on ERI's test tuning tower to deliver a VSWR match of 1.15:1 or lower when set per chart. It is possible that your match could be sub-optimized due to your specific surroundings and mounting configuration. Nevertheless, your VSWR should never exceed a 1.5:1.

Half-Wave 100 Series Applications

The half-wave spacing of elements provides a practical solution to the problem of downward radiation. Due to the interactions between flipped elements when arranged as half-waved spaced 2-bay or 4-bay arrays, the match is flatter over a wider range of frequencies (typically 6 MHz) than full wave spaced antennas. Therefore the settings table for half-wave antennas is much reduced and only four setting points are charted.

Improving the Match of Your 100 Series Antenna

The antenna was designed to have an optimized match and bandwidth on a small triangular tower or pole. If you desire that the antenna be tuned in it's actual environment due to an unacceptable mismatch, follow these steps to attempt to reduce reflected energy.

1. Reposition the element's feed strap to either one position above and/or below the starting position. Use the best of the three positions and move on to step 2.
2. Readjust the dipole's arm tip length in ¼" increments to reach minimal VSWR. Realize that the longer the dipole arm is, the more likely it will shift a null (as indicated on an analyzer sweep) to a lower frequency.

Use the below area to record your purchase for future reference.

100 Series Model Number:_____
Operating Frequency:_____
When Purchased:_____
Agents Phone Number:_____
Antenna Match:_____

Step 1: Secure the Feed Grounding Ring to the Element Arm

1. To ensure a good electrical connection between the Grounding Ring and the Element Arm, temporarily remove the 5/16 wing-nut, lock-washer and flat-washers from the grounding set-screw.

2. Next, locate your frequency range and antenna type number and find the corresponding grounding ring position on assembly drawing chart.

3. Now slide the Grounding Ring over the spot that corresponds to the correct grounding ring position.

4. Using a 5/32 inch Allen wrench, tighten the set screw to 11 lbf·ft (15 N·m) torque imbedding the screw into the Element Arm.

5. Repeat step 1 for the remaining Element Arm assemblies.

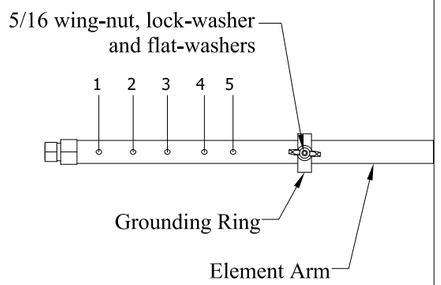

Step 1

Step 2: Install Arm Extenders

1. Loosen the 15/16 inch End Fastener (brass nut found at each end of both element arms) to the point where the Arm Extenders can be freely inserted. NOTE: As shipped, the element arm's 15/16 inch end fasteners are pre-tightened in order to trap the assemblies' internal compression ring. Caution should be exercised while performing this operation. Removing the nut could result in the loss of the internal compression ring.

2. Insert an Arm Extender into each end of the Element Arms.

3. Locate your frequency range and antenna type number in the Tip Length table and find the corresponding Tip Length "L". NOTE: Be certain that you are using the length that corresponds both to your antenna frequency and type number.

4. Position each Arm Extender so that the exposed length is "L" (from the table). This Length is measured from the top of the 15/16 inch clamping nut to the tip of arm extender. NOTE: The extender tip length is critical and must be set correctly.

5. Once the Arm Extender is set, secure the connection with an adjustable wrench and torque to 15 lbf·ft (21 N·m).

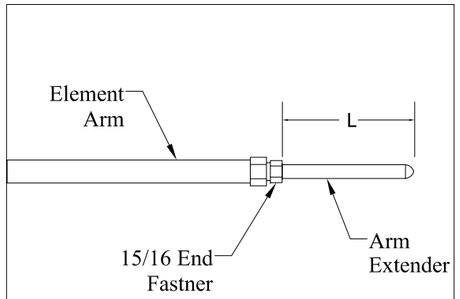

Step 2

Step 3: Mount the Element Arms to the Element Boom

1. Remove the mounting hardware (stainless steel 3/8 flat-washer, lock-washer and nut) from both Boom Cradle Brackets. (Step 3a & 3b).

2. Place one Element Arm into each Boom Cradle Bracket with the Grounding Ring Stud pointing up.

3. Secure the arm to the Cradle Bracket using the mounting hardware (stainless steel 3/8 flat-washer, lock-washer and nut).

4. Tighten the cradle nut until the cradle's sharp grounding point is firmly seated into the Element Arm material and the lock washer is compressed, approximately 12 lbf·ft (16 N·m) torque.

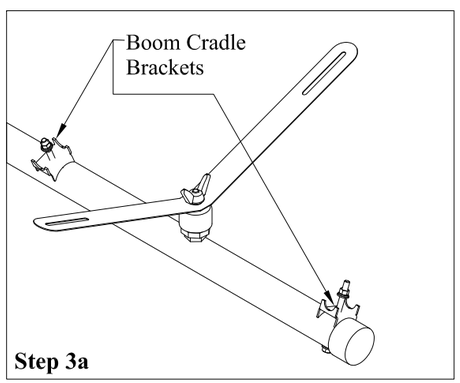

Step 3a

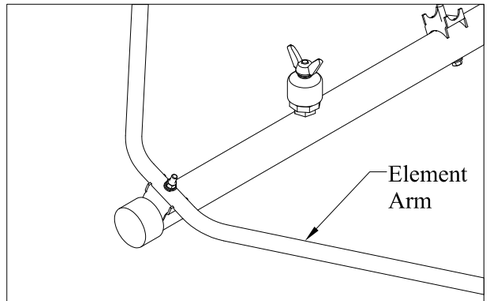

Step 3b

Step 4: Attach the Feed Strap

1. Loosen the feed insulator wing-nut and swing the strap from the shipped position (perpendicular to the Boom) to where the strap engages the Grounding Ring's protruding threaded studs (set-screws).

2. Fasten the strap to the two threaded studs; a proper connection is obtained when the strap is sandwiched between the two stainless-steel flat washers, lock washer and 5/16 inch wing-nut removed in Step 1.The Grounding Ring Wing-Nut is secured using 8 lbf·ft (11 N·m) of torque applied to the wing-nut.

3. Hand tighten the Insulator wing nut taking care not to exceed the 3 lbf·ft (4 N·m) torque rating.

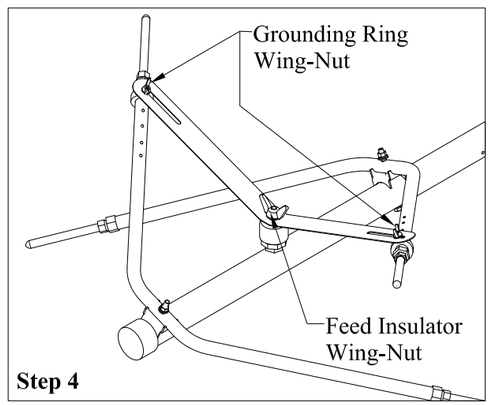

Step 4

Step 5: Secure the Antenna to its support structure

A Universal Mounting Clamp Kit is included with the antenna for ease of mounting to the tower leg. The Brackets supplied mount to legs ranging from Ø1.25 thru Ø5.00. The kit generally eliminates the need for any additional brackets, however chain and "J" bolts can be ordered for larger pole installations.

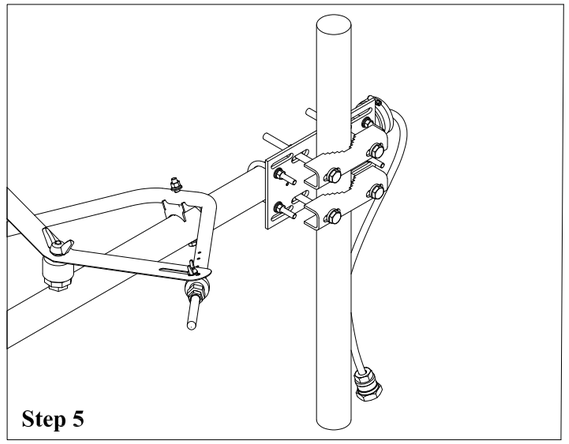
Step 5

For Technical Support call 877 ERI-LINE or 1 (812) 925-6000, or visit our website at www.eriinc.com

1. ANTENNA INPUT = 7/16 DIN MALE GAS BLOCK CONNECTOR. MATING LINE MUST HAVE 7/16 DIN FEMALE CONNECTOR. ANTENNA INPUT CONNECTOR IS ATTACHED TO 1/2" FROM CABLE. THIS ANTENNA FEED CABLE, (PIGTAIL) EXTENDS APPROX. 7.5 FT. PAST BOOM. THIS PIGTAIL MUST BE SECURED USING CABLE TIES (ITEM #6).

2. BRACKETS SUPPLIED MOUNT TO LEGS RANGING FROM Ø1.25 MIN. TO Ø5.00 MAX.

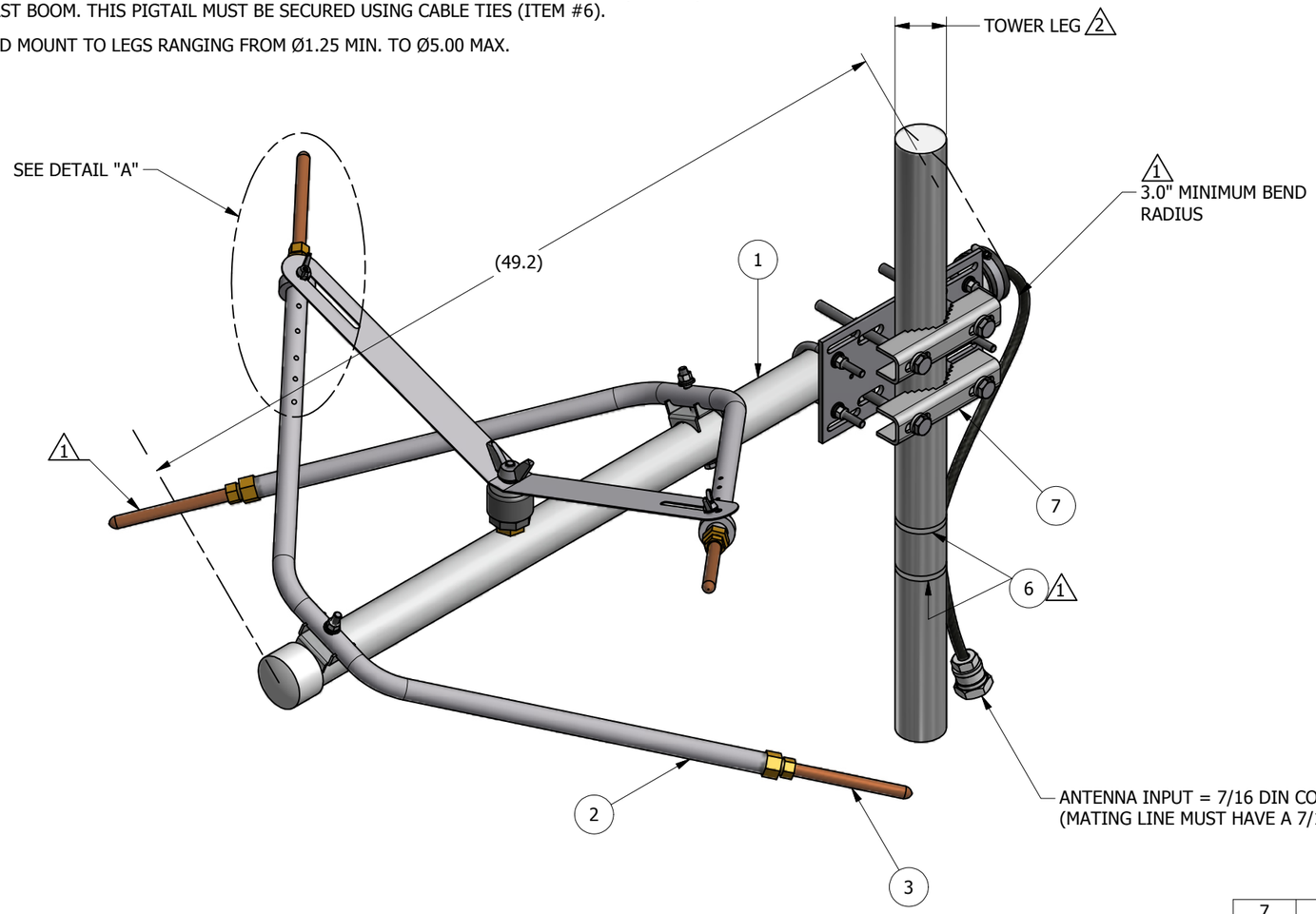

AE-100A-1M CHART			
FREQUENCY RANGE	TIP LENGTH - inch	TIP LENGTH - cm	GROUNDING RING POSITION
107.5 - 108.0	2.31	5.87	1
106.5 - 107.4	2.75	6.99	1
105.5 - 106.4	3.00	7.62	1
104.5 - 105.4	3.31	8.41	1
103.5 - 104.4	3.69	9.37	1
102.5 - 103.4	4.00	10.16	1
101.5 - 102.4	4.38	11.11	1
100.5 - 101.4	4.63	11.75	1
99.5 - 100.4	5.00	12.7	1
98.5 - 99.4	5.31	13.49	1
97.5 - 98.4	5.63	14.29	1
96.5 - 97.4	6.06	15.4	1
95.5 - 96.4	6.19	15.72	3
94.5 - 95.4	6.56	16.67	3
93.5 - 94.4	7.13	18.1	3
92.5 - 93.4	7.31	18.57	3
91.5 - 92.4	7.50	19.05	4
90.5 - 91.4	7.88	20	4
89.5 - 90.4	8.31	21.11	4
88.5 - 89.4	8.75	22.23	4
87.5 - 88.4	9.19	23.34	4

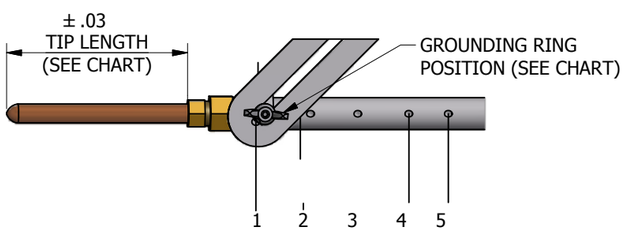

DETAIL A
GROUNDING RING POSITION & TIP LENGTH

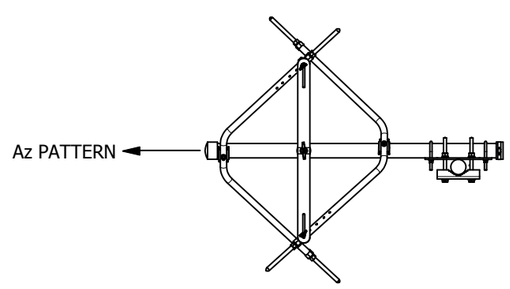

TOP VIEW

ITEM	QTY	PART NUMBER	DESCRIPTION
7	1	HRK0003S	ROUND MEMBER CLAMP (KIT)
6	10	CP0032	BLACK WIRE TIES
5	1	BOX0094	BOX TEMPLATE (NOT SHOWN)
4	1	BOX0092	BOX (NOT SHOWN)
3	1	AE-100A-N006	ARM EXTENDER (KIT)
2	2	AE-100A-N004	ELEMENT ARM ASSEMBLY
1	1	AE-100A-N003	ELEMENT BOOM ASSEMBLY

BILL OF MATERIAL

AISC CERTIFIED FABRICATOR

THIRD ANGLE PROJECTION

MATERIAL

FINISH

TOLERANCES
OVERALL-NOT CUMULATIVE
UNLESS OTHERWISE SPECIFIED, ALL DIMENSIONS ARE IN INCHES AND APPLICABLE AT 20°C (68°F)
INTERPRET DIMENSIONS AND TOLERANCES PER ASME Y14.5M-1994

1 PLACE DECIMAL ± .1
2 PLACE DECIMAL ± .03
3 PLACE DECIMAL ± .010
ANGULAR ± .5°
FRACTIONAL ± 1/16"

PROJECT NO.		
ERI APPROVAL	NAME	DATE
DRAWN BY	CLR	1/15/2016
DRAFTING		
DESIGN MGR.	K.SCHARP	7/13/2016
ENG.	R.ROSE	7/13/2016
MANUF.	REF	7/13/2016
EXT. APPROVAL		
SUPERSEDES PART NO.		
FILE NAME: AE-100A-1M.idw		

ELECTRONICS RESEARCH INC.
ESTABLISHED 1943
7777 GARDNER Rd.
CHANDLER, IN
47610-9219
PHONE: (812) 925-6000
FAX: (812) 925-4030

TITLE:
100A SERIES ANTENNA
1 BAY ASSEMBLY

SIZE	CAGE CODE	DWG NO.	REV.
B	OZNS1	AE-100A-1M	
SCALE : AS NOTED	WEIGHT: N / A	SHEET: 1 OF 1	

1 BRACKETS SUPPLIED MOUNT TO LEGS RANGING FROM Ø1.25 MIN. TO Ø5.00 MAX.

2 ELEMENT FEED PIGTAILS ARE APPROX. 7.5 FT. LONG & MUST BE SECURED USING CABLE TIES SUPPLIED WITH ITEM #1.

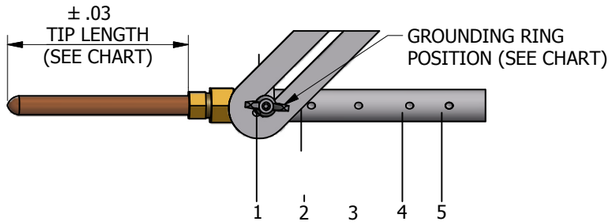

DETAIL A
GROUNDING RING POSITION & TIP LENGTH

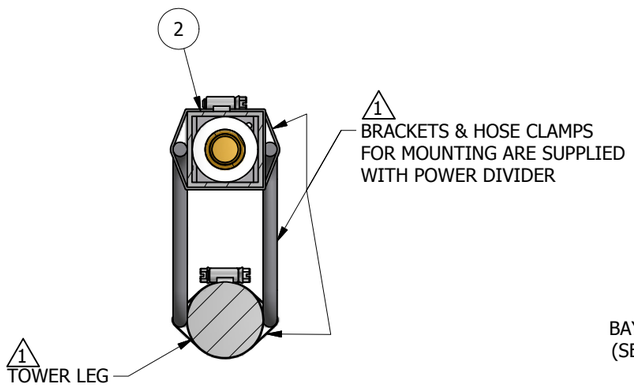

SECTION B-B
SCALE 1 / 4

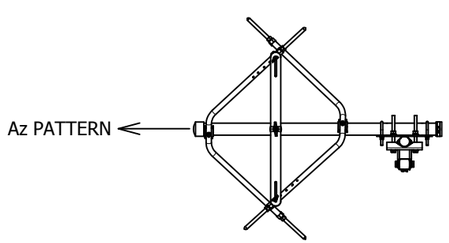

TOP VIEW

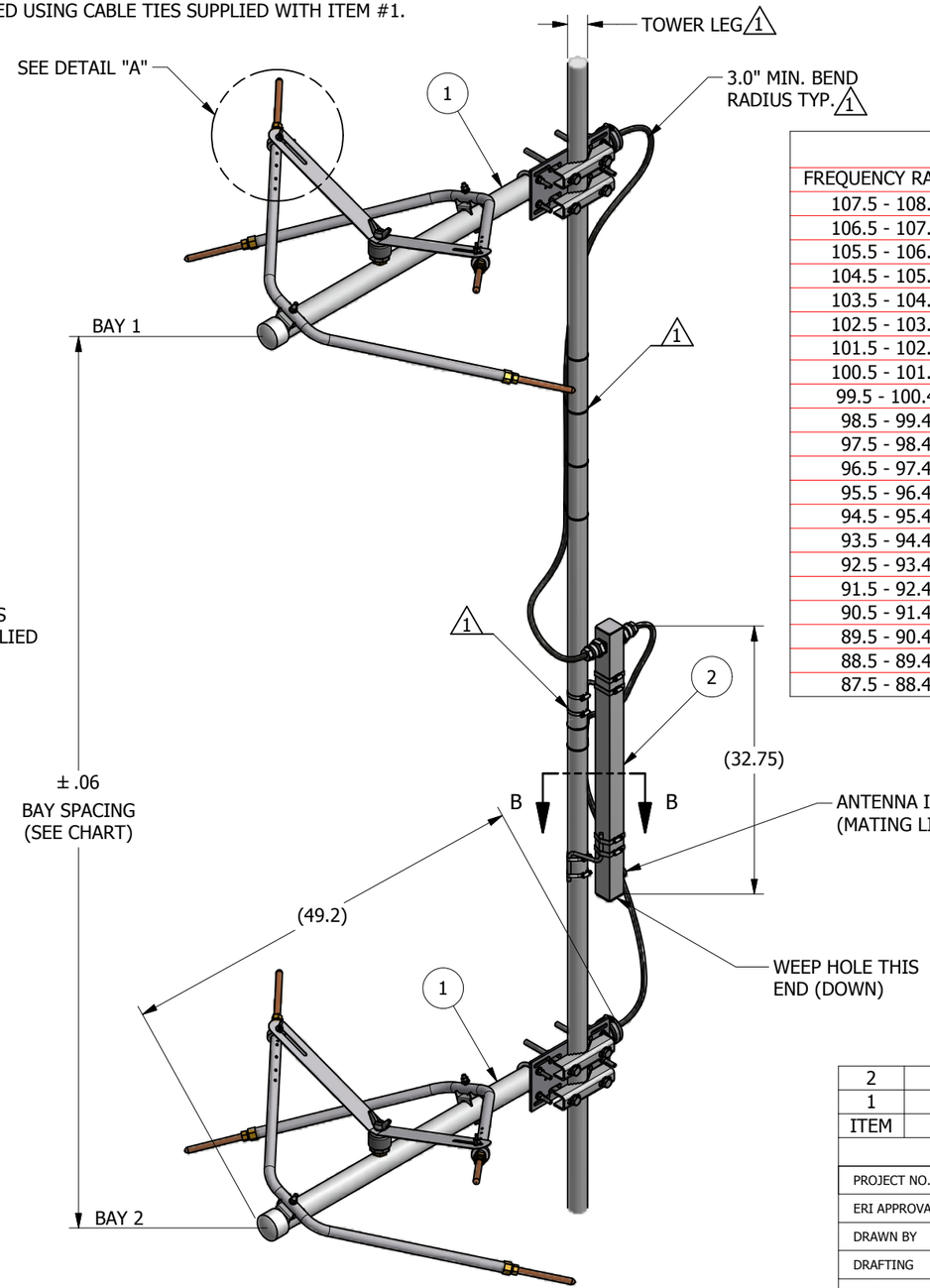

AE-100A-2F CHART

FREQUENCY RANGE	BAY SPACING - inch	BAY SPACING - cm	TIP LENGTH - inch	TIP LENGTH - cm	G.R.P.
107.5 - 108.0	109.25	277.5	2.25	5.72	1
106.5 - 107.4	110.31	280.19	2.63	6.67	1
105.5 - 106.4	111.38	282.89	3.00	7.62	1
104.5 - 105.4	112.38	285.43	3.38	8.57	1
103.5 - 104.4	113.50	288.29	3.75	9.53	1
102.5 - 103.4	114.56	290.99	4.13	10.48	1
101.5 - 102.4	115.75	294.01	4.56	11.59	1
100.5 - 101.4	116.88	296.86	4.88	12.38	1
99.5 - 100.4	118.00	299.72	5.19	13.18	1
98.5 - 99.4	119.25	302.9	5.56	14.13	1
97.5 - 98.4	120.44	305.91	5.88	14.92	1
96.5 - 97.4	122.63	311.47	6.25	15.88	1
95.5 - 96.4	122.94	312.26	6.31	16.03	3
94.5 - 95.4	124.25	315.6	6.63	16.83	3
93.5 - 94.4	125.50	318.77	7.00	17.78	3
92.5 - 93.4	126.88	322.26	7.38	18.73	3
91.5 - 92.4	128.25	325.76	7.50	19.05	4
90.5 - 91.4	129.69	329.41	7.88	20	4
89.5 - 90.4	131.13	333.06	8.31	21.11	4
88.5 - 89.4	132.63	336.87	8.75	22.23	4
87.5 - 88.4	134.13	340.64	9.19	23.34	4

G.R.P. = GROUNDING RING POSITION

ITEM	QTY	PART NUMBER	DESCRIPTION
2	1	PD100A	100A SERIES POWER DIVIDER
1	2	AE-100A-1M	100A SERIES ANTENNA

BILL OF MATERIAL

PROJECT NO.		
ERI APPROVAL	NAME	DATE
DRAWN BY	CLR	1/19/2016
DRAFTING		
DESIGN MGR.	K.SCHARP	7/13/2016
ENG.	R.ROSE	7/13/2016
MANUF.	REF	7/13/2016
EXT. APPROVAL		
SUPERSEDES PART NO.		
FILE NAME: AE-100A-2F.idw		

ELECTRONICS RESEARCH INC.
ESTABLISHED 1943
7777 GARDNER Rd.
CHANDLER, IN
47610-9219
PHONE: (812) 925-6000
FAX: (812) 925-4030

TITLE:
2 BAY FULL WAVE ASSEMBLY
100A SERIES ANTENNA

SIZE	CAGE CODE	DWG NO.	REV.
B	OZNS1	AE-100A-2F	
SCALE : AS NOTED	WEIGHT: N/A	SHEET: 1 OF 1	

AISC CERTIFIED FABRICATOR

THIRD ANGLE PROJECTION

MATERIAL

FINISH

TOLERANCES
OVERALL-NOT CUMULATIVE
UNLESS OTHERWISE SPECIFIED, ALL DIMENSIONS ARE IN INCHES AND APPLICABLE AT 20°C (68°F)
INTERPRET DIMENSIONS AND TOLERANCES PER ASME Y14.5M-1994

1 PLACE DECIMAL ± .1
2 PLACE DECIMAL ± .03
3 PLACE DECIMAL ± .010
ANGULAR ± .5°
FRACTIONAL ± 1/16"

REVISION HISTORY			
REV	DESCRIPTION	DATE	APPROVED
A	UPDATED PER ECR 2016-032	9/26/2016	K. SCHARP

1. BRACKETS SUPPLIED MOUNT TO LEGS RANGING FROM Ø1.25 MIN. TO Ø5.00 MAX.
2. ELEMENT FEED PIGTAILS ARE APPROX. 7.5 FT. LONG & MUST BE SECURED USING CABLE TIES SUPPLIED WITH ITEM #1.
3. WHEN BAY 2 IS INSTALLED THE ELEMENT IS TO BE FACING DOWNWARD AS SHOWN. FOR PROPER ATTACHMENT THE PLATE MUST BE MOVED TO OPPOSITE SIDE OF BOOM AS SHOW.

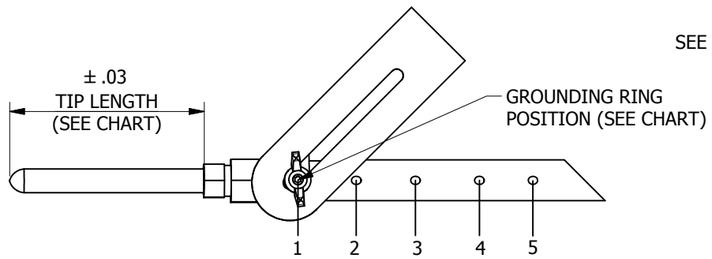

DETAIL A
(GROUNDING RING POSITION & TIP LENGTH)

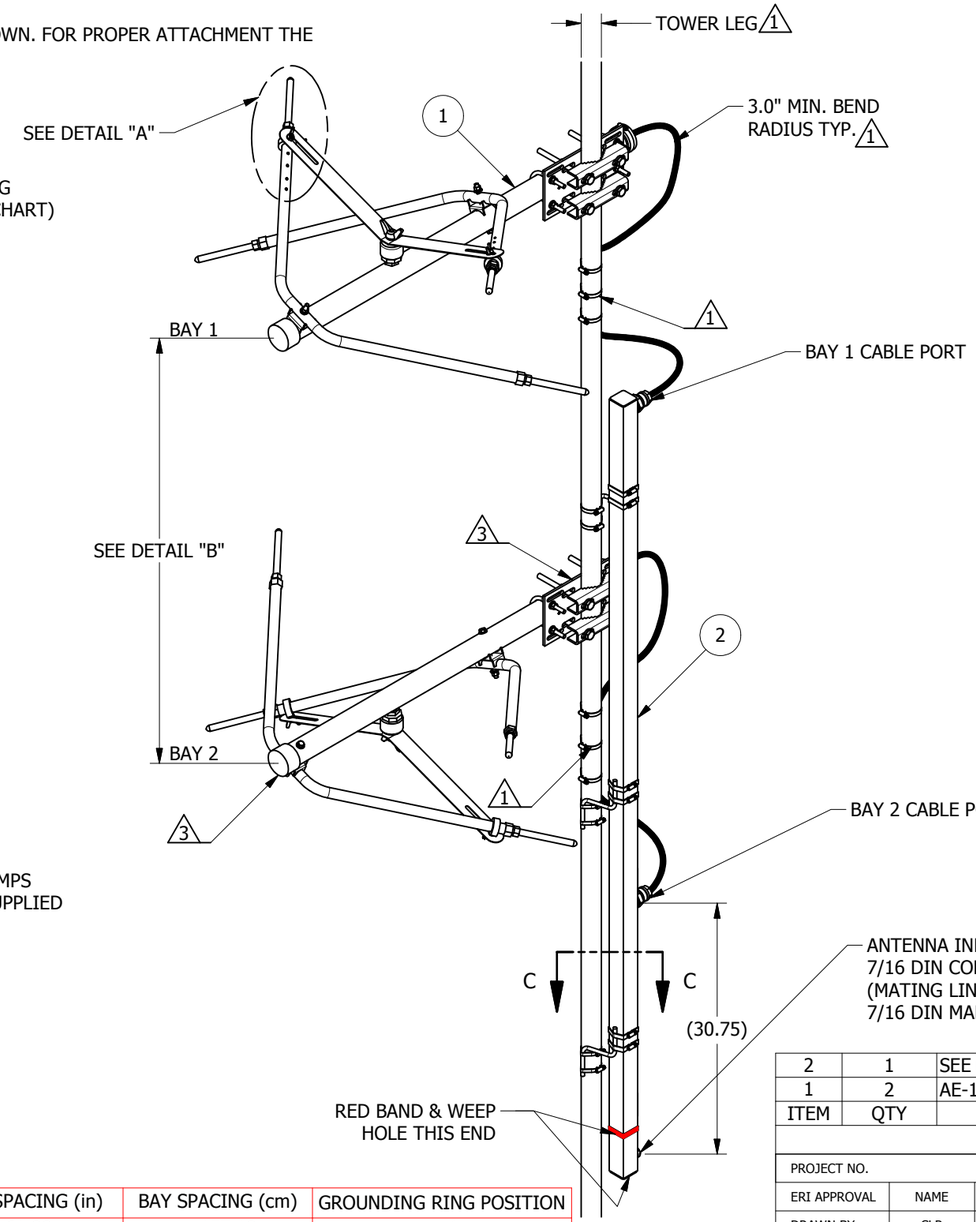

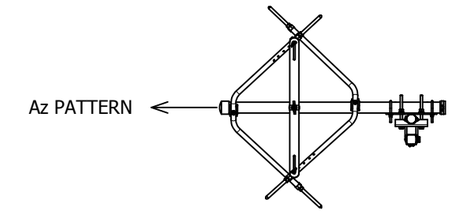

TOP VIEW

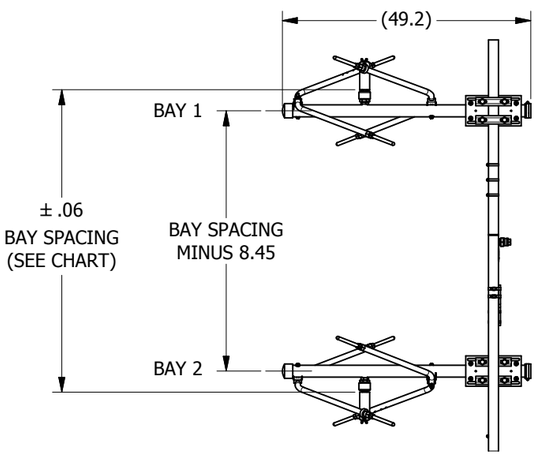

DETAIL B

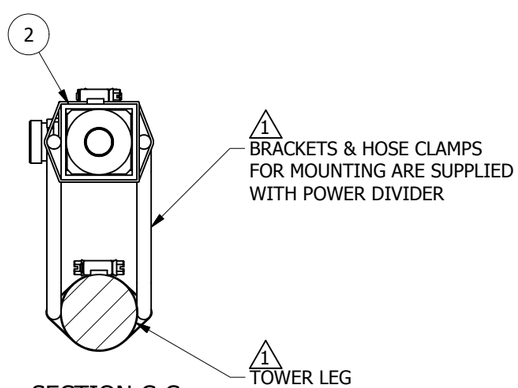

SECTION C-C
SCALE 1 / 4

FREQUENCY	ITEM 2 P / N	TIP LENGTH (in)	TIP LENGTH (cm)	BAY SPACING (in)	BAY SPACING (cm)	GROUNDING RING POSITION
88.1 - 91.9	PD100A - 4 - 21	8.69	22.07	61.88	157.18	4
92.1 - 95.9	PD100A - 4 - 22	6.75	17.15	61.88	157.18	4
96.1 - 101.9	PD100A - 4 - 23	5.13	13.03	56.50	143.51	3
102.1 - 107.9	PD100A - 4 - 24	3.06	7.77	54.44	138.28	2

ITEM	QTY	PART NUMBER	DESCRIPTION
2	1	SEE CHART	100A SERIES POWER DIVIDER
1	2	AE-100A-1M	100A SERIES ANTENNA

BILL OF MATERIAL

AISC CERTIFIED FABRICATOR

THIRD ANGLE PROJECTION

MATERIAL

FINISH

TOLERANCES
OVERALL-NOT CUMULATIVE
UNLESS OTHERWISE SPECIFIED, ALL DIMENSIONS ARE IN INCHES AND APPLICABLE AT 20°C (68°F)
INTERPRET DIMENSIONS AND TOLERANCES PER ASME Y14.5M-1994

1 PLACE DECIMAL ± .1
2 PLACE DECIMAL ± .03
3 PLACE DECIMAL ± .010
ANGULAR ± .5°
FRACTIONAL ± 1/16"

PROJECT NO.		
ERI APPROVAL	NAME	DATE
DRAWN BY	CLR	1/21/2016
DRAFTING		
DESIGN MGR.	K.SCHARP	7/13/2016
ENG.	R.ROSE	7/13/2016
MANUF.	REF	7/13/2016
EXT. APPROVAL		
SUPERSEDES PART NO.		
FILE NAME: AE-100A-2F-HW.idw		

ELECTRONICS RESEARCH INC.
ESTABLISHED 1943
7777 GARDNER Rd.
CHANDLER, IN
47610-9219
PHONE: (812) 925-6000
FAX: (812) 925-4030

TITLE:
2 BAY HALF WAVE ASSEMBLY
100A SERIES ANTENNA

SIZE	CAGE CODE	DWG NO.	REV.
B	OZNS1	AE-100A-2F-HW	A

SCALE :	WEIGHT:	SHEET:
AS NOTED	75.22 lbmass	1 OF 1

1 BRACKETS SUPPLIED MOUNT TO LEGS RANGING FROM Ø1.25 MIN. TO Ø5.00 MAX.

2 ELEMENT FEED PIGTAILS ARE APPROX. 7.5 FT. LONG & MUST BE SECURED USING CABLE TIES SUPPLIED WITH ITEM #1.

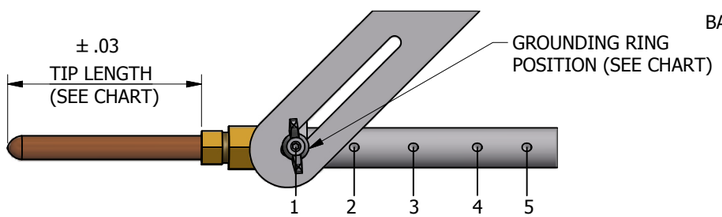

DETAIL A
GROUNDING RING POSITION & TIP LENGTH

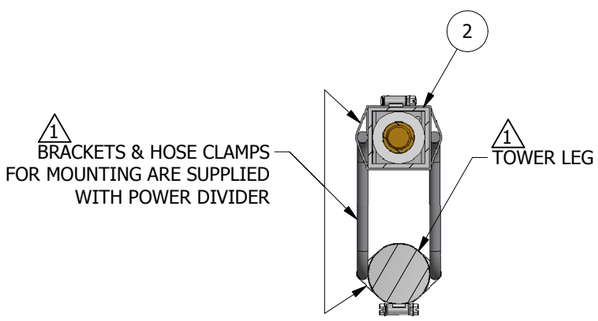

SECTION B-B

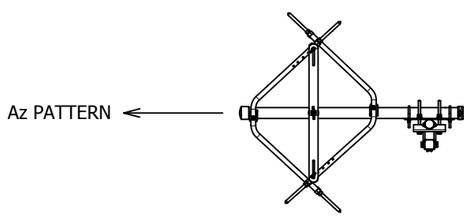

TOP VIEW

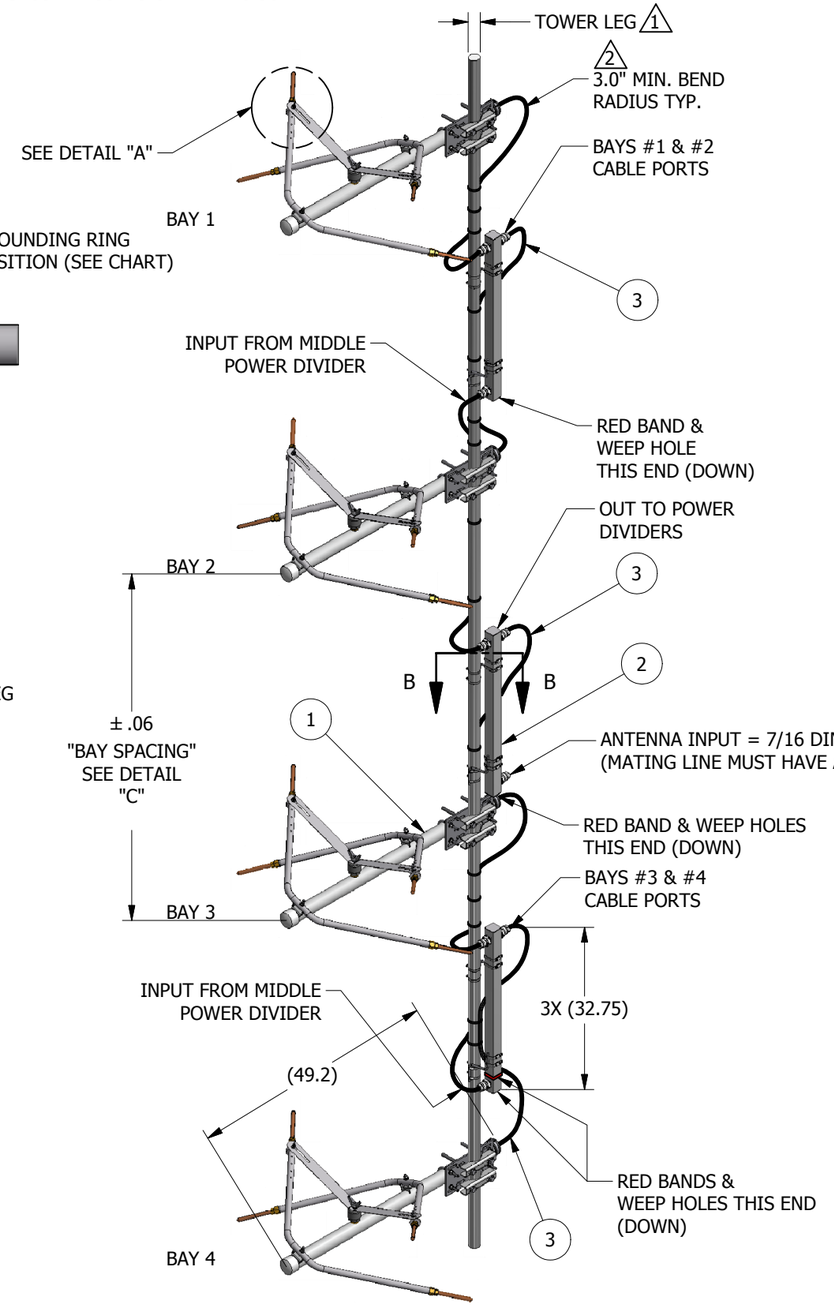

AE-100A-4F CHART					
FREQUENCY RANGE	BAY SPACING - inch	BAY SPACING - cm	TIP LENGTH - inch	TIP LENGTH - cm	G.R.P.
107.5 - 108.0	134.13	340.67	9.00	22.86	5
106.5 - 107.4	132.63	336.86	8.69	22.06	5
105.5 - 106.4	131.13	333.05	8.25	20.95	5
104.5 - 105.4	129.69	329.40	7.81	19.84	5
103.5 - 104.4	128.25	325.75	7.44	18.89	5
102.5 - 103.4	126.88	322.26	7.06	17.93	5
101.5 - 102.4	125.50	318.77	6.81	17.30	4
100.5 - 101.4	124.25	315.59	6.50	16.51	4
99.5 - 100.4	122.94	312.26	6.06	15.39	4
98.5 - 99.4	122.63	311.46	5.69	14.44	4
97.5 - 98.4	120.44	305.91	5.39	13.65	4
96.5 - 97.4	119.25	302.89	5.00	12.70	4
95.5 - 96.4	118.00	299.72	4.56	11.58	4
94.5 - 95.4	119.88	296.86	4.19	10.63	4
93.5 - 94.4	115.75	294.00	4.66	10.31	3
92.5 - 93.4	114.56	290.98	3.63	9.20	3
91.5 - 92.4	113.50	288.29	3.06	7.77	4
90.5 - 91.4	112.38	285.43	2.63	6.66	4
89.5 - 90.4	111.38	282.89	2.19	5.55	5
88.5 - 89.4	110.31	280.19	1.89	4.76	5
87.5 - 88.4	109.25	277.49	1.63	4.12	5

G.R.P. = GROUNDING RING POSITION

ITEM	QTY	PART NUMBER	DESCRIPTION
3	2	F4A-DMDM-10.80-P	10.80' CABLE ASSEMBLY
2	3	PD100A	100A SERIES POWER DIVIDER
1	4	AE-100A-1M	100A SERIES ANTENNA

BILL OF MATERIAL

PROJECT NO.		
ERI APPROVAL	NAME	DATE
DRAWN BY	CLR	1/21/2016
DRAFTING		
DESIGN MGR.	K.SCHARP	7/13/2016
ENG.	R.ROSE	7/13/2016
MANUF.	REF	7/13/2016
EXT. APPROVAL		
SUPERSEDES PART NO.		
FILE NAME: AE-100A-4F.idw		

ELECTRONICS RESEARCH INC.
ESTABLISHED 1943
7777 GARDNER Rd.
CHANDLER, IN
47610-9219
PHONE: (812) 925-6000
FAX: (812) 925-4030

TITLE:
4 BAY FULL WAVE ASSEMBLY
100A SERIES ANTENNA

SIZE	CAGE CODE	DWG NO.	REV.
B	OZNS1	AE-100A-4F	
SCALE : AS NOTED	WEIGHT: N/A	SHEET: 1 OF 2	

AISC CERTIFIED FABRICATOR

THIRD ANGLE PROJECTION

MATERIAL

FINISH

TOLERANCES
OVERALL-NOT CUMULATIVE
UNLESS OTHERWISE SPECIFIED, ALL DIMENSIONS ARE IN INCHES AND APPLICABLE AT 20°C (68°F)
INTERPRET DIMENSIONS AND TOLERANCES PER ASME Y14.5M-1994

1 PLACE DECIMAL ± .1
2 PLACE DECIMAL ± .03
3 PLACE DECIMAL ± .010
ANGULAR ± .5°
FRACTIONAL ± 1/16"

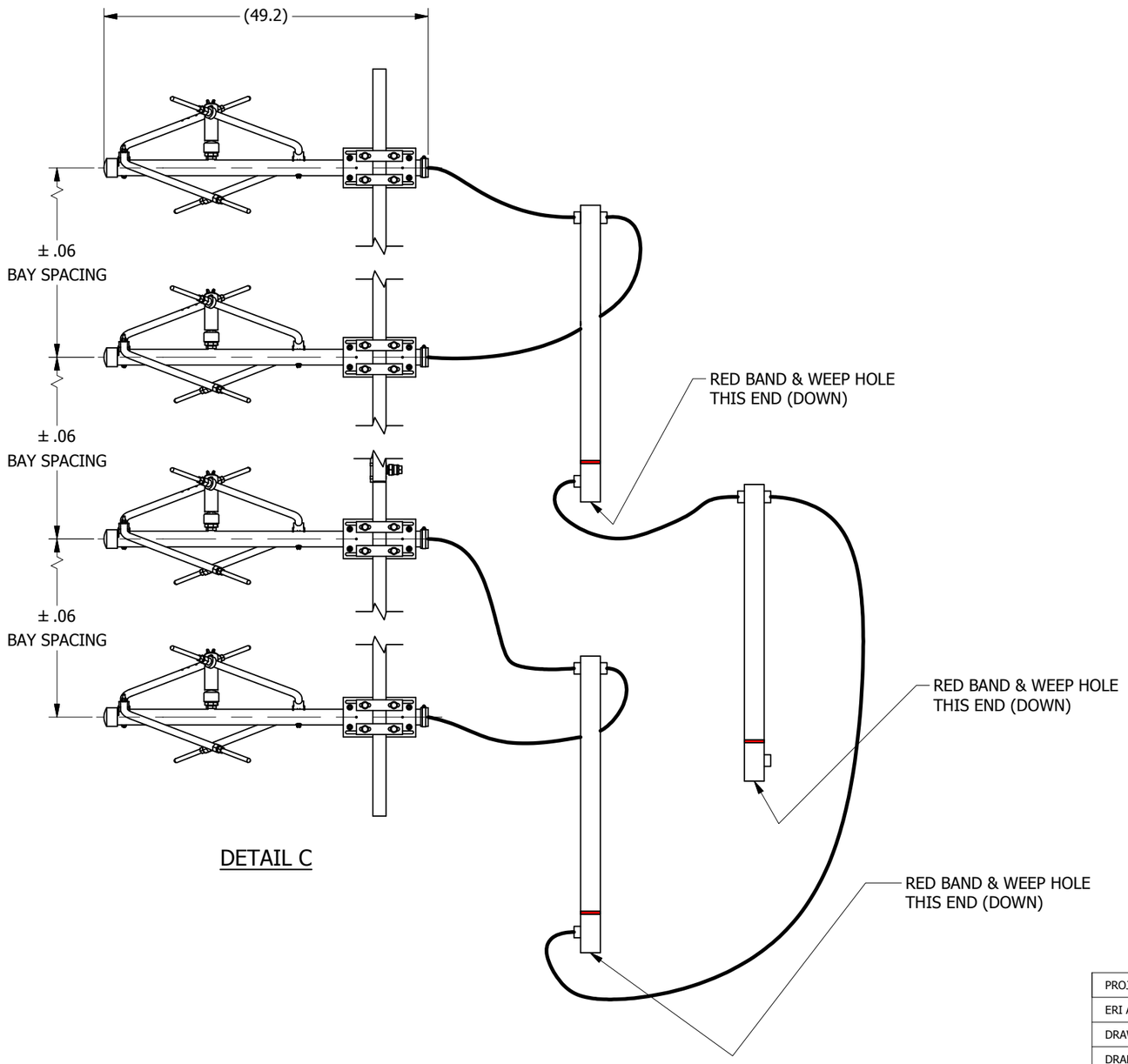

DETAIL C

PROJECT NO.		
ERI APPROVAL	NAME	DATE
DRAWN BY	CLR	1/21/2016
DRAFTING		
DESIGN MGR.	K.SCHARP	7/13/2016
ENG.	R.ROSE	7/13/2016
MANUF.	REF	7/13/2016
EXT. APPROVAL		
SUPERSEDES PART NO.		
FILE NAME: AE-100A-4F.idw		

ELECTRONICS RESEARCH INC.
ESTABLISHED 1943
7777 GARDNER Rd.
CHANDLER, IN
47610-9219
PHONE: (812) 925-6000
FAX: (812) 925-4030

TITLE:
4 BAY FULL WAVE ASSEMBLY
100A SERIES ANTENNA

SIZE	CAGE CODE	DWG NO.	REV.
B	OZNS1	AE-100A-4F	
SCALE : AS NOTED	WEIGHT: N/A	SHEET: 2 OF 2	

AISC CERTIFIED FABRICATOR

THIRD ANGLE PROJECTION

MATERIAL

FINISH

TOLERANCES
OVERALL-NOT CUMULATIVE
UNLESS OTHERWISE SPECIFIED, ALL DIMENSIONS ARE IN INCHES AND APPLICABLE AT 20°C (68°F)
INTERPRET DIMENSIONS AND TOLERANCES PER ASME Y14.5M-1994

1 PLACE DECIMAL ± .1
2 PLACE DECIMAL ± .03
3 PLACE DECIMAL ± .010
ANGULAR ± .5°
FRACTIONAL ± 1/16"

REVISION HISTORY			
REV	DESCRIPTION	DATE	APPROVED
A	UPDATED PER ECR 2016-032	9/26/2016	

1. BRACKETS SUPPLIED MOUNT TO LEGS RANGING FROM Ø1.25 MIN. TO Ø5.00 MAX.
2. ELEMENT FEED PIGTAILS ARE APPROX. 7.5 FT. LONG & MUST BE SECURED USING CABLE TIES SUPPLIED WITH ITEM #1.
3. WHEN BAY 2 & 3 IS INSTALLED THE ELEMENT IS TO BE FACING DOWNWARD AS SHOWN. FOR PROPER ATTACHMENT THE PLATE MUST BE MOVED TO OPPOSITE SIDE OF BOOM AS SHOW.

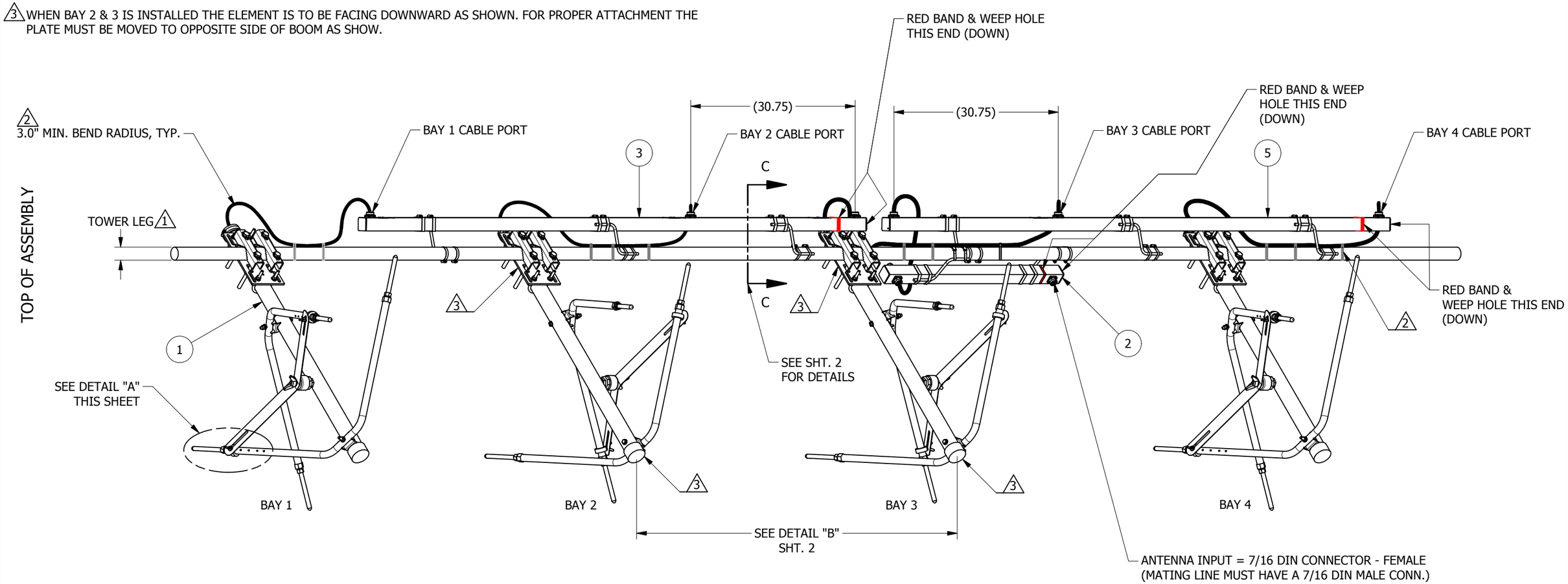

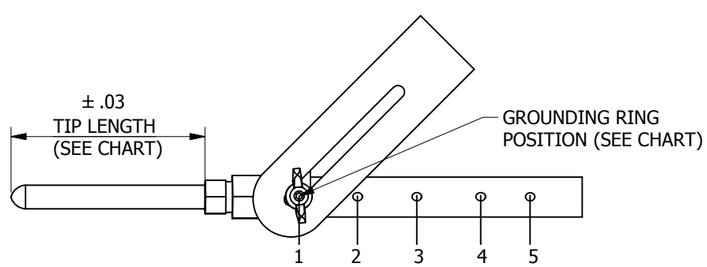

DETAIL A
(GROUNDING RING POSITION & TIP LENGTH)

ITEM	QTY	PART NUMBER	DESCRIPTION
5	1	SEE CHART	100A SERIES POWER DIVIDER
4	2	F4A-DMDM-10.80-P	10.80' CABLE ASSEMBLY
3	1	SEE CHART	100A SERIES POWER DIVIDER
2	1	PD100A	100A SERIES POWER DIVIDER
1	4	AE-100A-1M	100A SERIES ANTENNA

BILL OF MATERIAL

PROJECT NO.		
ERI APPROVAL	NAME	DATE
DRAWN BY	CLR	1/25/2016
DRAFTING		
DESIGN MGR.	K.SCHARP	7/13/2016
ENG.	R.ROSE	7/13/2016
MANUF.	REF	7/13/2016
EXT. APPROVAL		
SUPERSEDES PART NO.		
FILE NAME: AE-100A-4F-HW.idw		

ELECTRONICS RESEARCH INC.
ESTABLISHED 1943
7777 GARDNER Rd.
CHANDLER, IN
47610-9219
PHONE: (812) 925-6000
FAX: (812) 925-4030

TITLE:
4 BAY HALF WAVE ASSEMBLY
100A SERIES ANTENNA

SIZE	CAGE CODE	DWG NO.	REV.
B	OZNS1	AE-100A-4F-HW	A

SCALE :	WEIGHT:	SHEET:
AS NOTED	N/A	1 OF 2

AISC CERTIFIED FABRICATOR

THIRD ANGLE PROJECTION

MATERIAL

FINISH

TOLERANCES
OVERALL-NOT CUMULATIVE
UNLESS OTHERWISE SPECIFIED, ALL DIMENSIONS ARE IN INCHES AND APPLICABLE AT 20°C (68°F)
INTERPRET DIMENSIONS AND TOLERANCES PER ASME Y14.5M-1994

1 PLACE DECIMAL ± .1
2 PLACE DECIMAL ± .03
3 PLACE DECIMAL ± .010
ANGULAR ± .5°
FRACTIONAL ± 1/16"

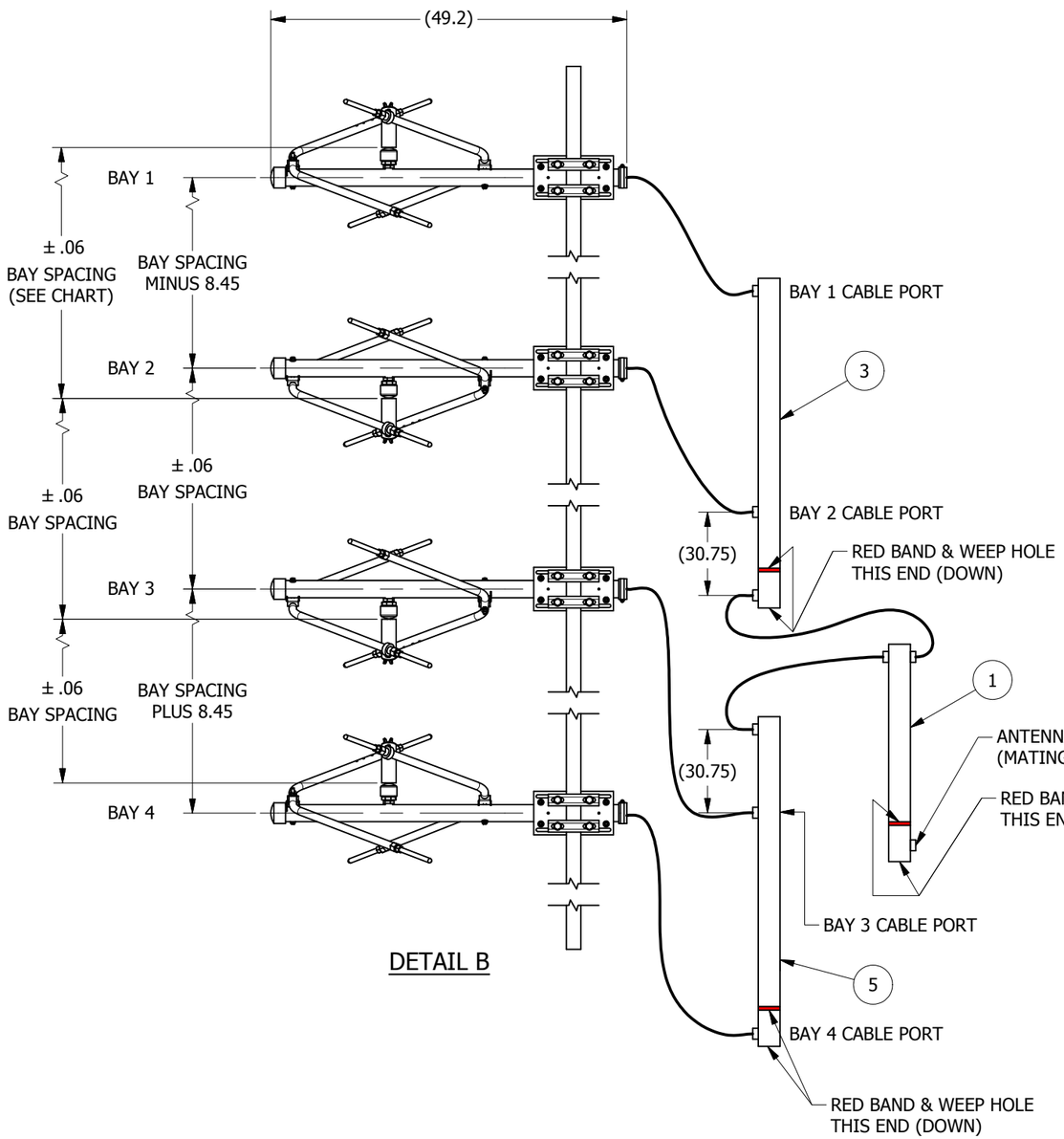

DETAIL B

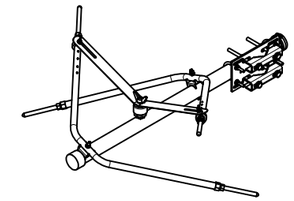

ANTENNA ELEMENT - ISO VIEW
(BAYS 1 & 4)

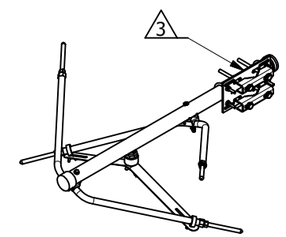

ANTENNA ELEMENT - ISO VIEW
(BAYS 2 & 3)

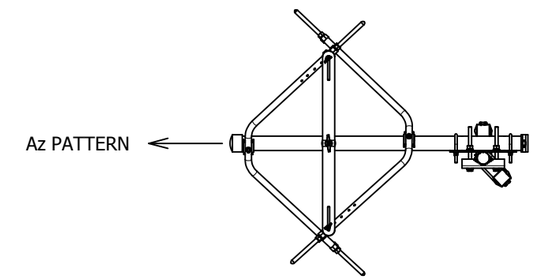

TOP VIEW

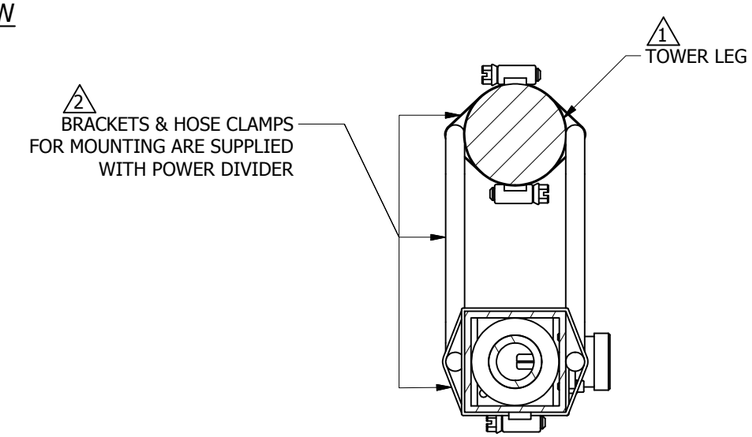

SECTION C-C

FREQUENCY	ITEM 3 P / N	ITEM #5 P / N	TIP LENGTH (in)	TIP LENGTH (cm)	BAY SPACING (in)	BAY SPACING (cm)	GROUNDING RING POSITION
88.1 - 91.9	PD100A - 4 - 41	PD100A - 4 - 41B	8.94	22.71	59.75	151.77	3
92.1 - 95.9	PD100A - 4 - 42	PD100A - 4 - 42B	6.50	16.51	59.75	151.77	4
96.1 - 101.9	PD100A - 4 - 43	PD100A - 4 - 43B	5.25	13.34	57.63	146.38	2
102.1 - 107.9	PD100A - 4 - 44	PD100A - 4 - 44B	3.31	8.41	54.44	138.28	2

AISC CERTIFIED FABRICATOR

THIRD ANGLE PROJECTION

MATERIAL

FINISH

TOLERANCES
OVERALL-NOT CUMULATIVE
UNLESS OTHERWISE SPECIFIED, ALL DIMENSIONS ARE IN INCHES AND APPLICABLE AT 20°C (68°F)
INTERPRET DIMENSIONS AND TOLERANCES PER ASME Y14.5M-1994

1 PLACE DECIMAL ± .1
2 PLACE DECIMAL ± .03
3 PLACE DECIMAL ± .010
ANGULAR ± .5°
FRACTIONAL ± 1/16"

PROJECT NO.		
ERI APPROVAL	NAME	DATE
DRAWN BY	CLR	1/25/2016
DRAFTING		
DESIGN MGR.	K.SCHARP	7/13/2016
ENG.	R.ROSE	7/13/2016
MANUF.	REF	7/13/2016
EXT. APPROVAL		
SUPERSEDES PART NO.		
FILE NAME: AE-100A-4F-HW.idw		

ELECTRONICS RESEARCH INC.
ESTABLISHED 1943
7777 GARDNER Rd.
CHANDLER, IN
47610-9219
PHONE: (812) 925-6000
FAX: (812) 925-4030

TITLE:
4 BAY HALF WAVE ASSEMBLY
100A SERIES ANTENNA

SIZE	CAGE CODE	DWG NO.	REV.
B	OZNS1	AE-100A-4F-HW	A

SCALE :	WEIGHT:	SHEET:
AS NOTED	N/A	2 OF 2